SPECIFICATIONS	
CAP MATERIAL/PLATING	BRASS/NICKEL
HARDWARE MATERIAL	STAINLESS STEEL
LANYARD MATERIAL	STAINLESS STEEL/PVC COATED
GASKET MATERIAL	NITRILE

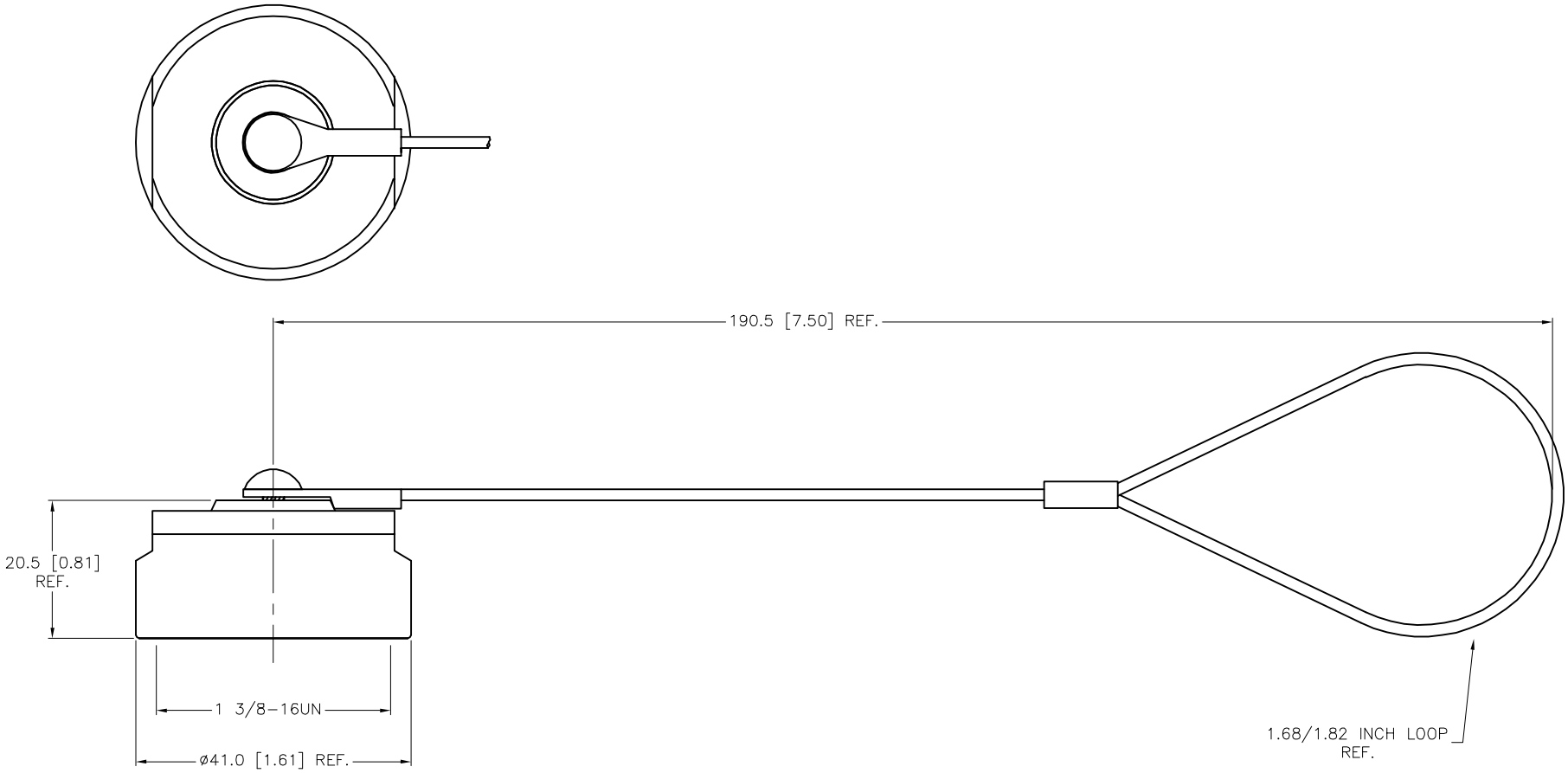

SOURCE DRAWING - FOR REFERENCE ONLY

RELATED DOCUMENTS	3RD ANGLE PROJECTION	THIS DRAWING IS CONFIDENTIAL AND THE PROPERTY OF TURCK INC. USE OF THIS DOCUMENT WITHOUT WRITTEN PERMISSION IS PROHIBITED.	TURCK	3000 CAMPUS DRIVE MINNEAPOLIS, MN 55441 1–800–544–7769 (763) 553–7300 (763) 553–0708 fax www.turck.us
1. 2. 3. 4.				
MATERIAL: SEE SPECIFICATIONS	ALL DIMENSIONS DISPLAYED ON THIS DRAWING ARE FOR REFERENCE ONLY	DRFT: RDS	DATE: 12/17/08	DESCRIPTION: GKDM–CC
		APVD:	SCALE: 1=1.0	
FINISH: SEE SPECIFICATIONS	CONTACT TURCK FOR MORE INFORMATION	UNIT OF MEASUREMENT: **MILLIMETER [INCH]**		IDENTIFICATION NO.: U2–14837 — REV: E
		DO NOT SCALE THIS DRAWING		FILE: U2–14837 — SHEET 1 OF 1

REV	DESCRIPTION	BY	DATE	ECO NO.
E	UPDATE PRT ECO	NF	08/08/23	500000008605